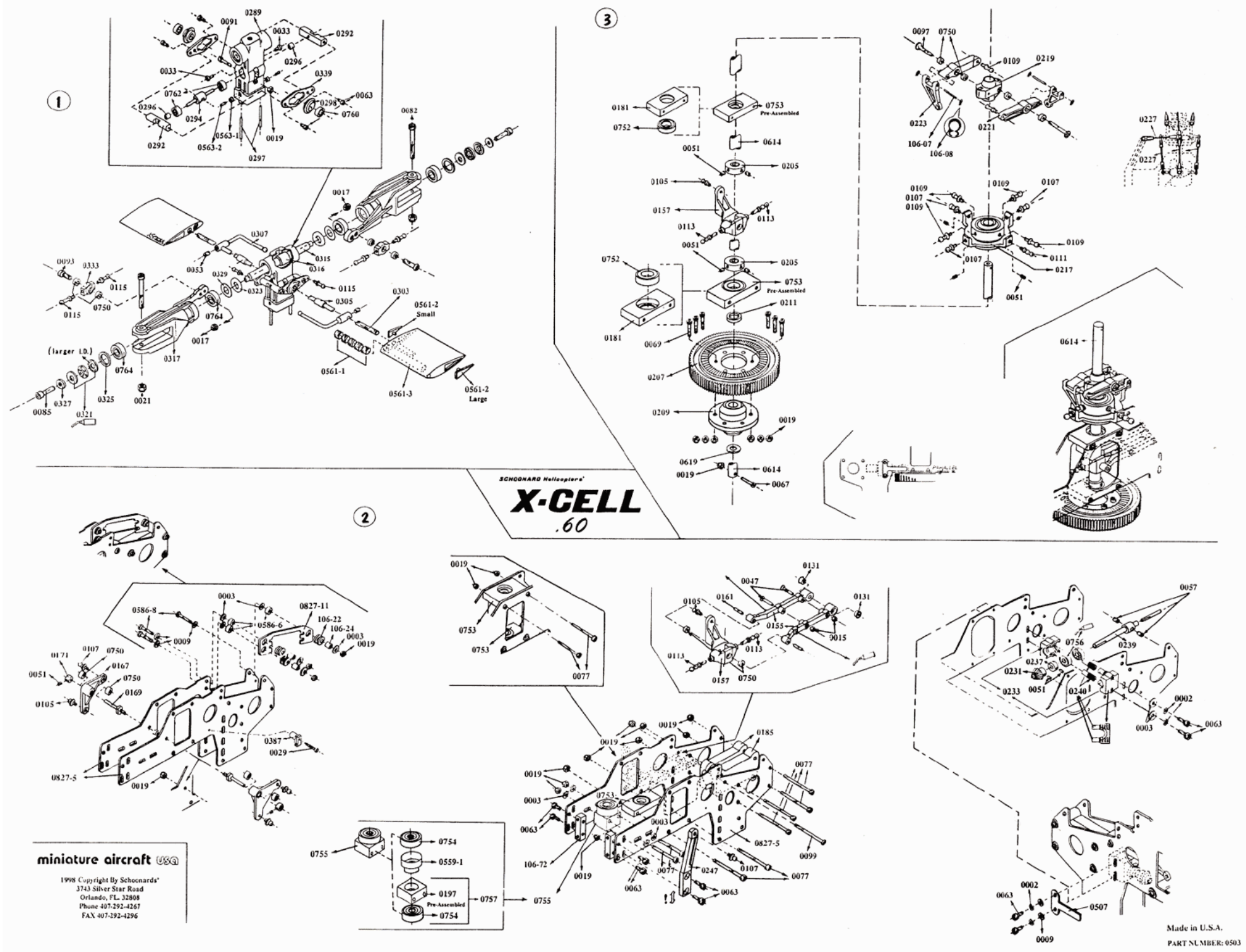
1
2
3
SCHOCNARD Helicopters'
X-CELL
.60
0289
0091
0033
0292
0296
0339
0063
0298
0760
0762
0294
0563-1
0019
0297
0082
0017
0307
0315
0316
0053
0329
0323
0115
0305
0303
0561-2
Small
0093
0333
0750
0764
0317
(larger I.D.)
0325
0021
0327
0085
0321
0561-1
0561-3
0561-2
Large
0181
0752
0753
Pre-Assembled
0614
0051
0205
0105
0157
0113
0211
0069
0207
0209
0619
0067
0097
0109
0219
0223
0221
106-07
106-08
0107
0111
0217
0227
0586-8
0009
0003
0586-6
0827-11
106-22
106-24
0171
0167
0169
0387
0029
0827-5
0077
0131
0047
0161
0155
0015
0157
0185
106-72
0247
0099
0754
0559-1
0197
0757
0755
0756
0239
0237
0231
0233
0240
0002
0063
0507
Made in U.S.A.
PART NUMBER: 0503
miniature aircraft USA
1998 Copyright By Schocnards'
3743 Silver Star Road
Orlando, FL. 32808
Phone 407-292-4267
FAX 407-292-4296

SCHOONARD Helicopters

X-CELL .60

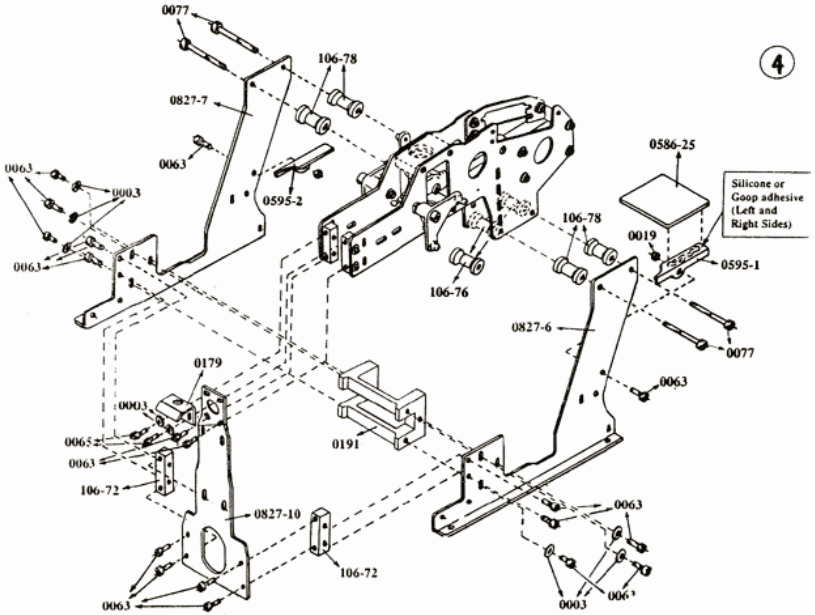

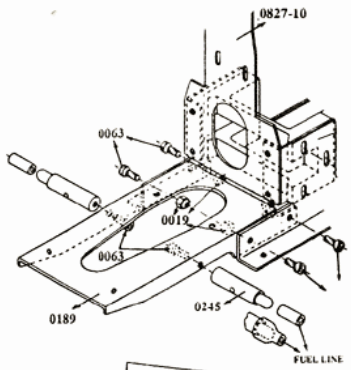

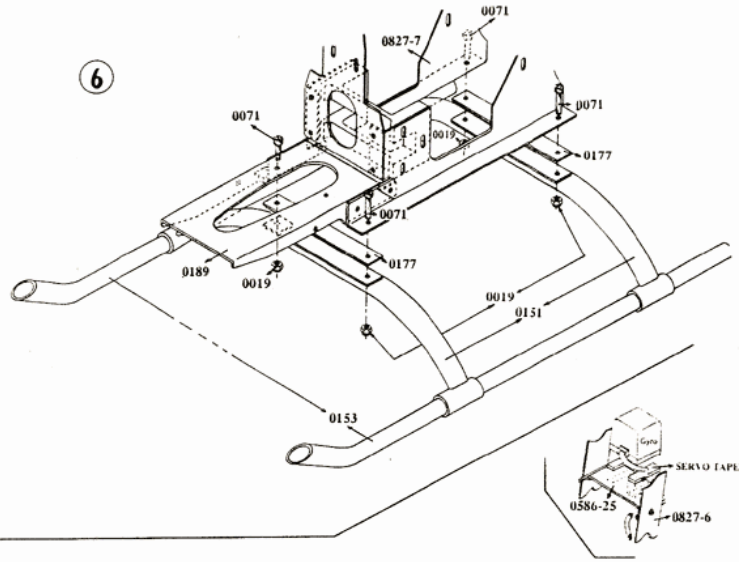

miniature aircraft USA

1998 - Copyright by Schoonard's
3743 Silver Star Road
Orlando, Florida 32808
Phone 407-292-4267
FAX 407-292-4296

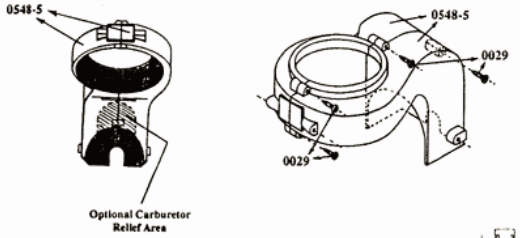

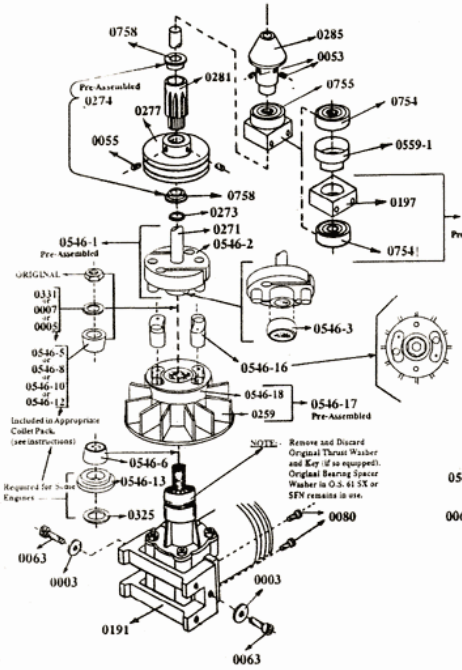

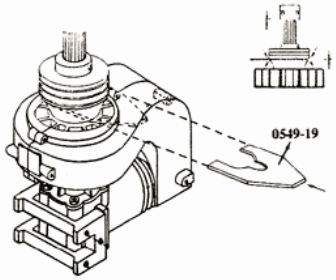

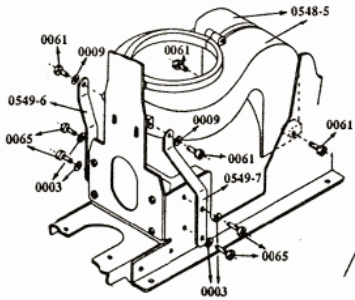

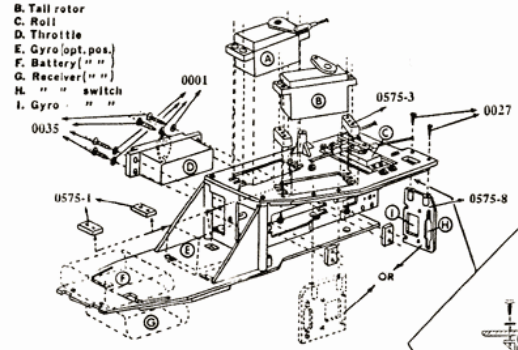

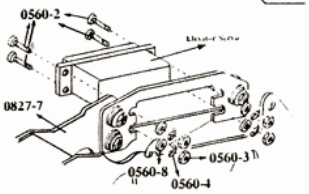

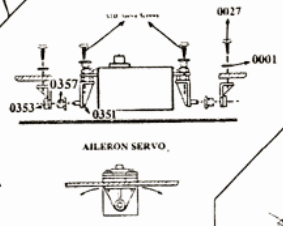

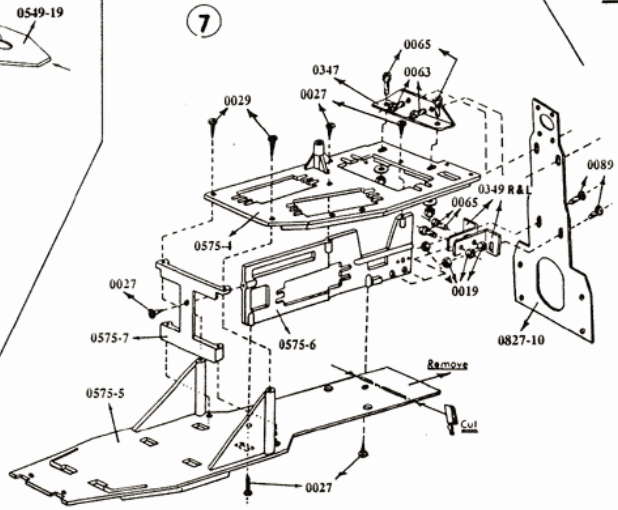

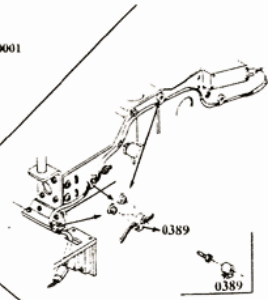

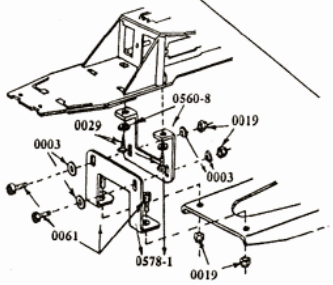

Made in U.S.A.

PART NUMBER: 0503

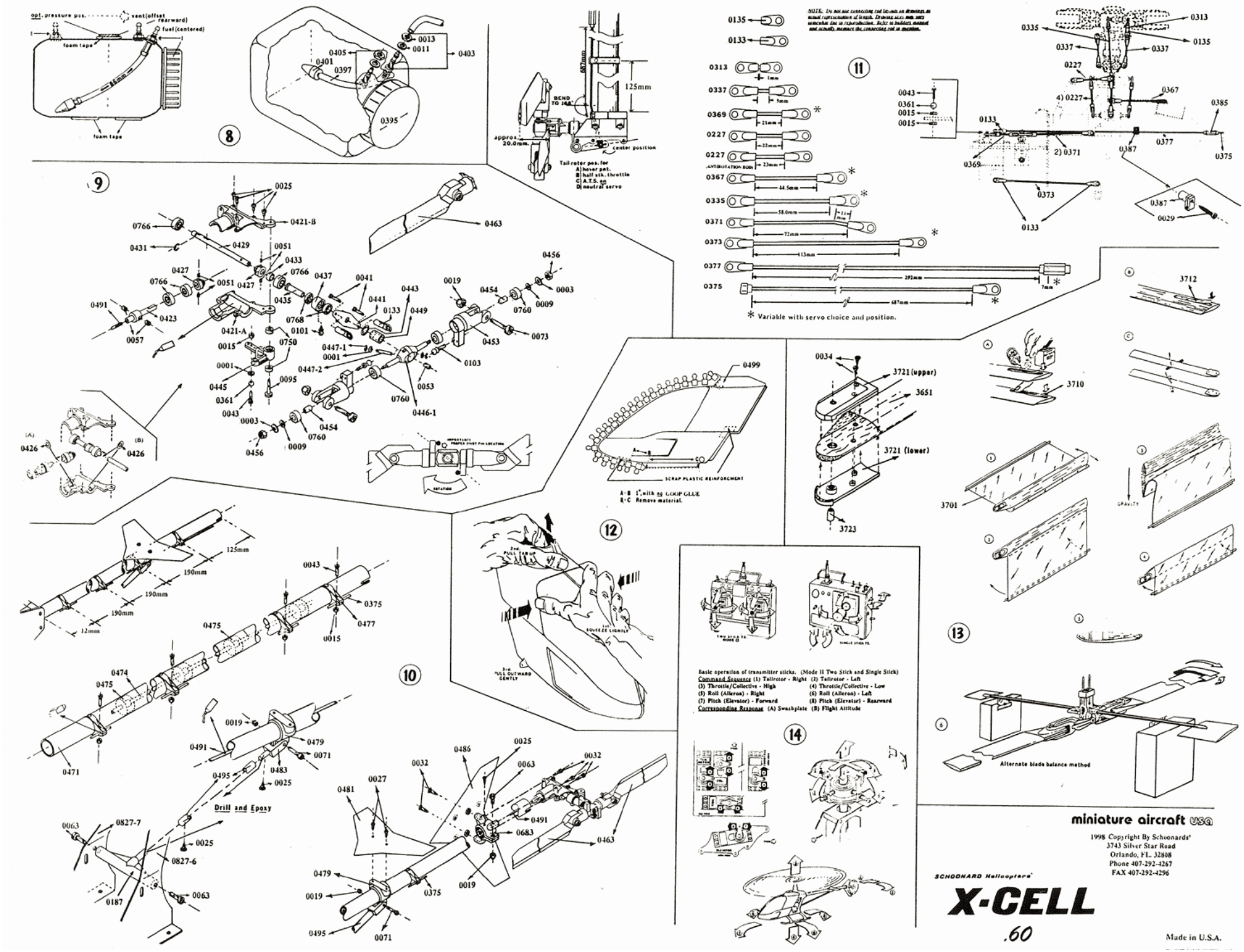
opt. pressure pos.
vent (offset rearward)
fuel (centered)
foam tape
foam tape
8
9
125mm
BEND TO 14°
approx. 20.0mm.
center position
Tailrotor pos. for
A) hover pot.
B) half stk. throttle
C) A.T.S. on
D) neutral servo
11
* Variable with servo choice and position.
12
SCRAP PLASTIC REINFORCEMENT
A-B 1" with 88 GOOP GLUE
B-C Remove material.
13
Alternate blade balance method
10
Drill and Epoxy
14
Basic operation of transmitter sticks. (Mode II Two Stick and Single Stick)
Command Sequence (1) Tailrotor - Right (2) Tailrotor - Left
(3) Throttle/Collective - High (4) Throttle/Collective - Low
(5) Roll (Aileron) - Right (6) Roll (Aileron) - Left
(7) Pitch (Elevator) - Forward (8) Pitch (Elevator) - Rearward
Corresponding Response (A) Swashplate (B) Flight Attitude
miniature aircraft USA
1998 Copyright By Schoonards'
3743 Silver Star Road
Orlando, FL. 32808
Phone 407-292-4267
FAX 407-292-4296
SCHOONARD Helicopters
X-CELL
.60
Made in U.S.A.