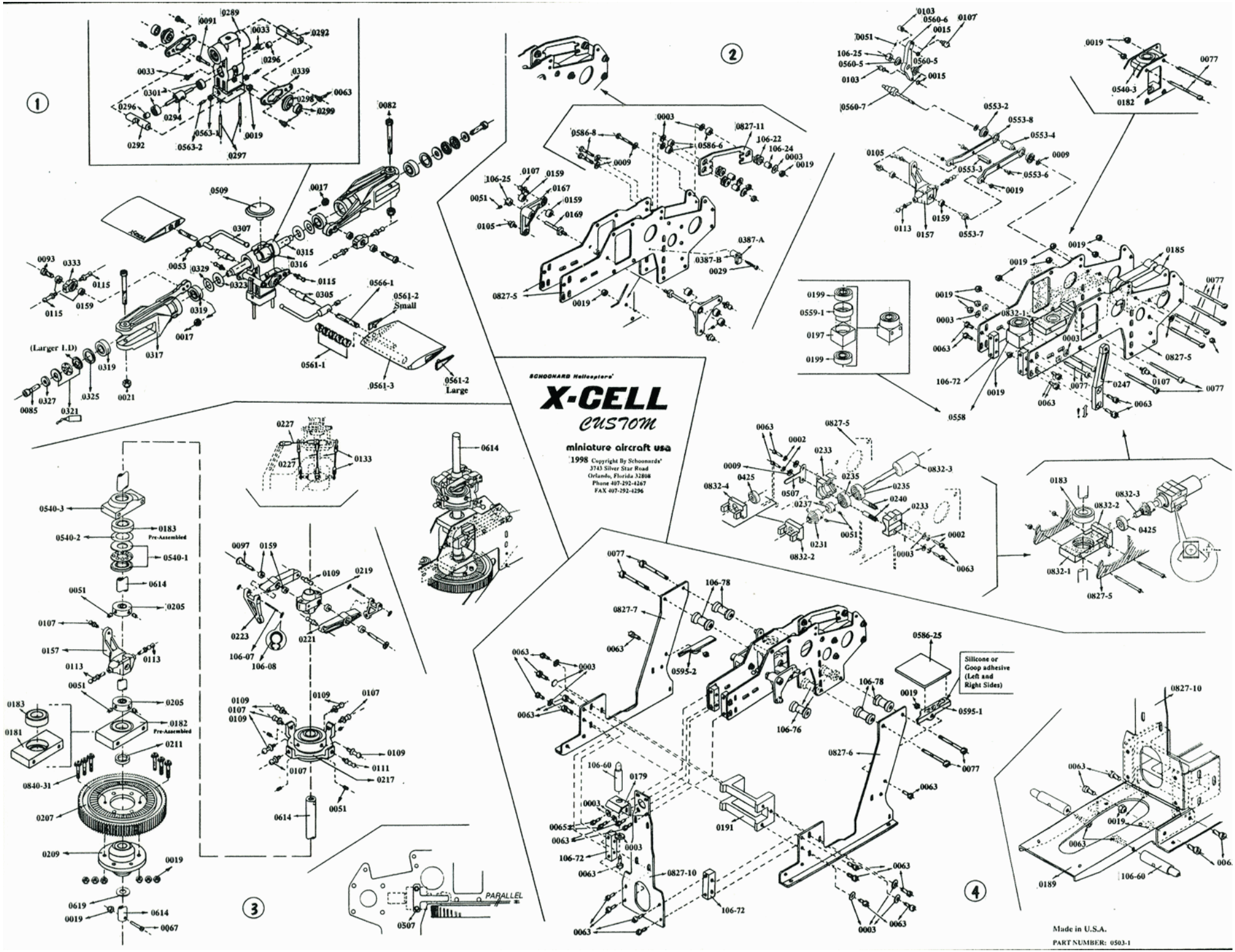
SCHOONARD Helicopters
X-CELL
custom
miniature aircraft usa
1998 Copyright By Schoonards
3743 Silver Star Road
Orlando, Florida 32808
Phone 407-292-4267
FAX 407-292-4296
Silicone or Goop adhesive (Left and Right Sides)
PARALLEL
Made in U.S.A.
PART NUMBER: 0503-1

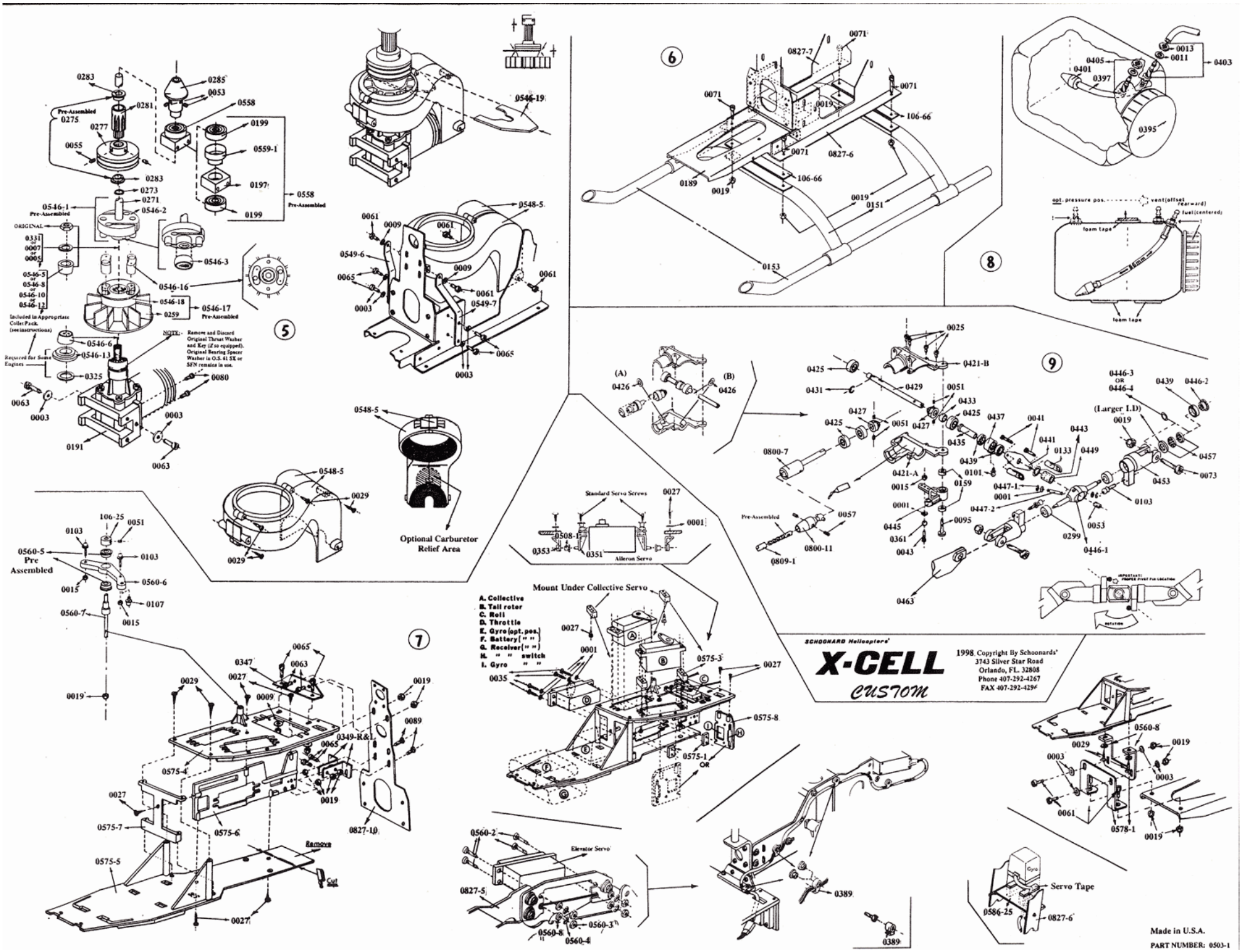
5
6
7
8
9
Pre-Assembled
ORIGINAL
Included in Appropriate Collet Pack. (see instructions)
Required for Some Engines
NOTE:- Remove and Discard Original Thrust Washer and Key (if so equipped). Original Bearing Spacer Washer in O.S. 41 SX or SFN remains in use.
Optional Carburetor Relief Area
Standard Servo Screws
Aileron Servo
Mount Under Collective Servo
A. Collective
B. Tail rotor
C. Roll
D. Throttle
E. Gyro (opt. pos.)
F. Battery (" ")
G. Receiver (" ")
H. " " switch
I. Gyro " "
Elevator Servo
Remove
Cut Slot
Servo Tape
Gyro
(Larger I.D)
Pre-Assembled
SCHOONARD Helicopters
X-CELL
custom
1998 Copyright By Schoonards'
3743 Silver Star Road
Orlando, FL. 32808
Phone 407-292-4267
FAX 407-292-4296
Made in U.S.A.
PART NUMBER: 0503-1

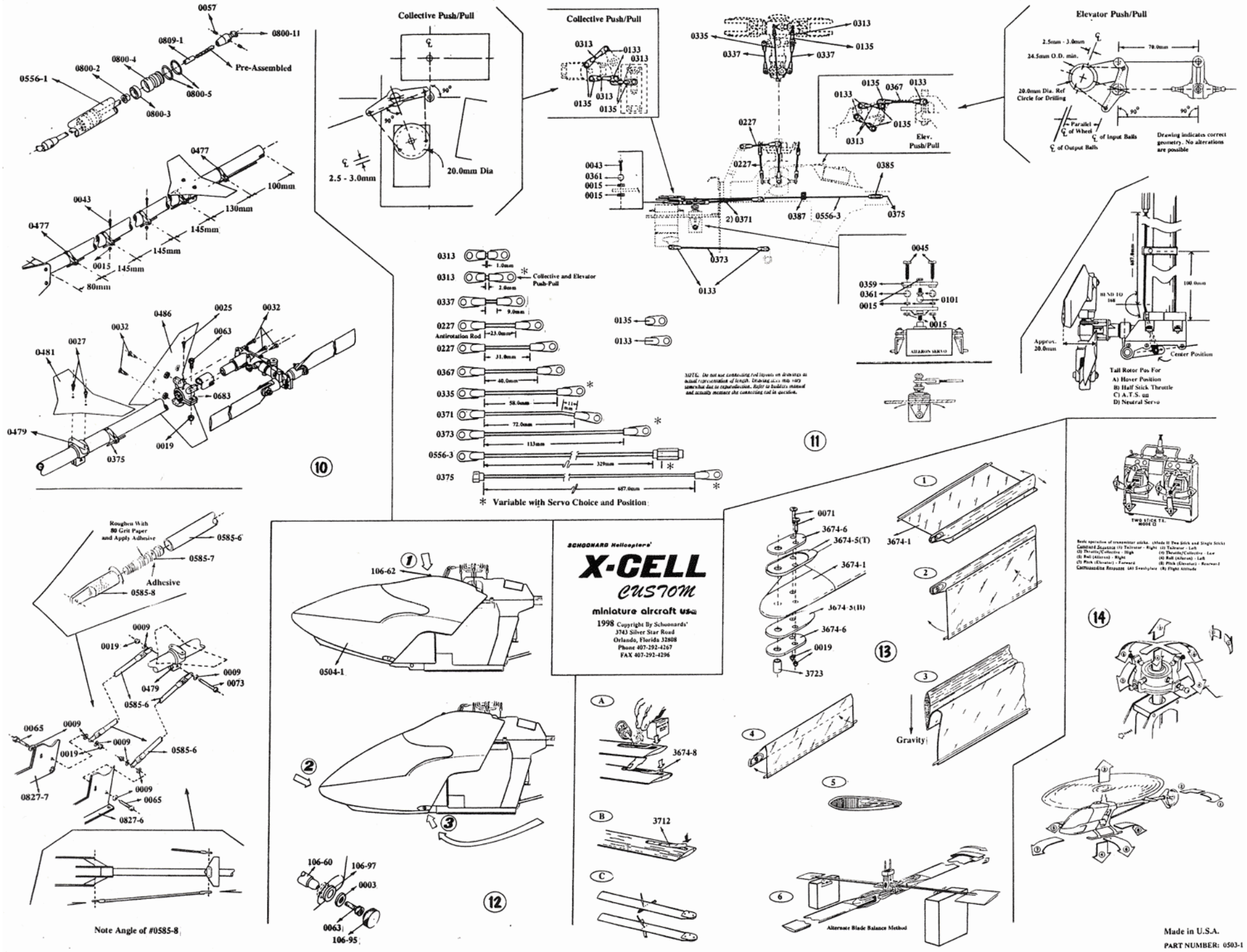

gotomaxx software