Made in U.S.A.

PART NUMBER: 0503-1

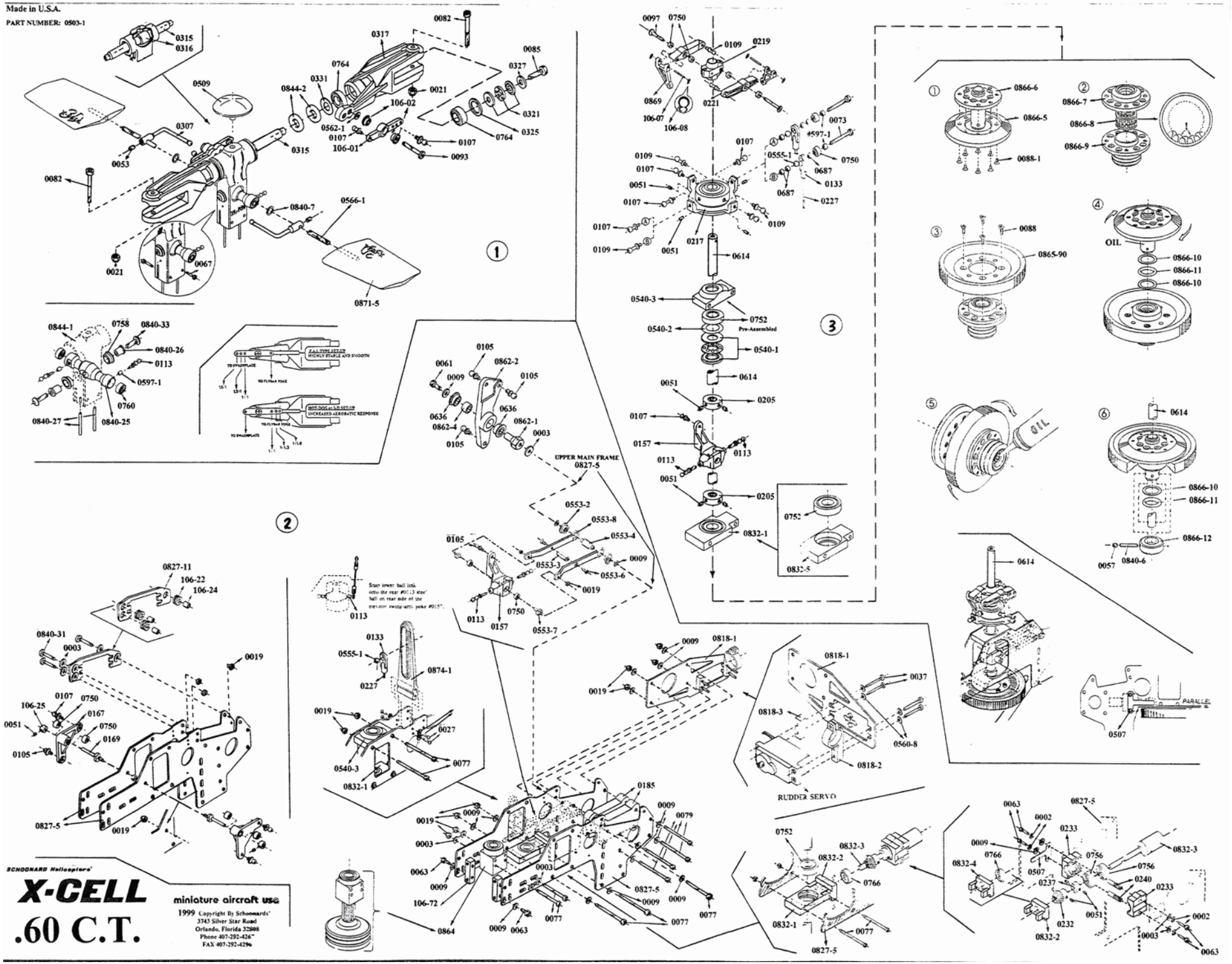

SCHOONARD Helicopters'

X-CELL

.60 C.T.

miniature aircraft use

1999 Copyright By Schoonards'

3743 Silver Star Road
Orlando, Florida 32808
Phone 407-292-426"
FAX 407-292-429e

SCHOONARD Helicopters

X-CELL .60 C.T.

1999 Copyright By Schoonards'
3743 Silver Star Road
Orlando, FL. 32808
Phone 407-292-4267
FAX 407-292-4296

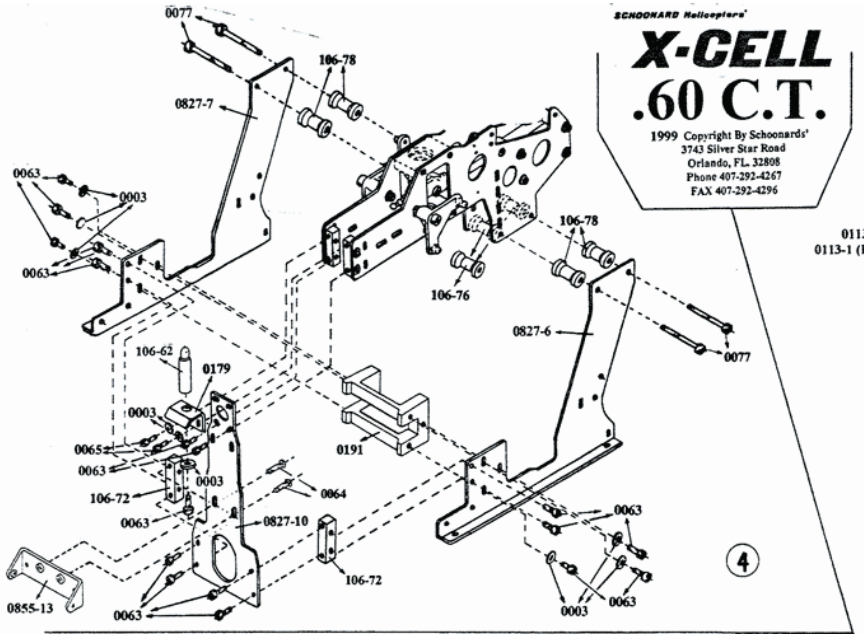

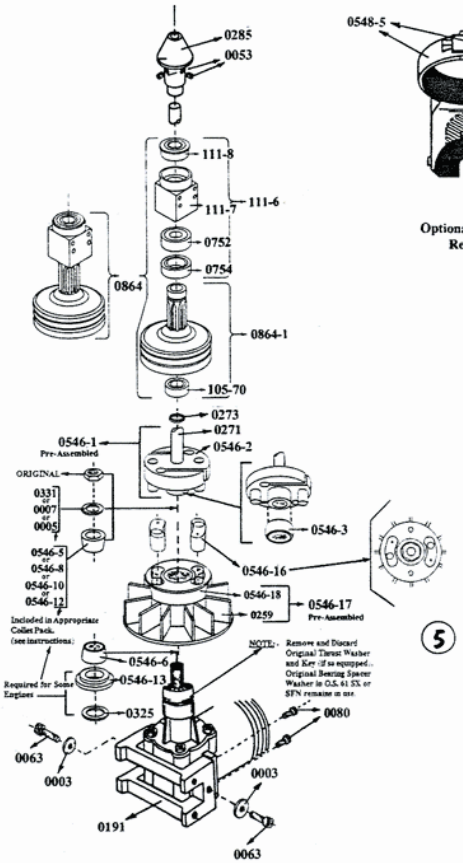

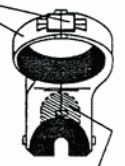

Optional Carburetor Relief Area

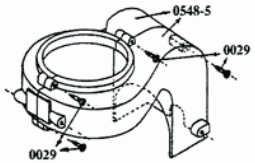

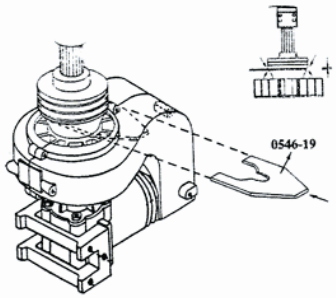

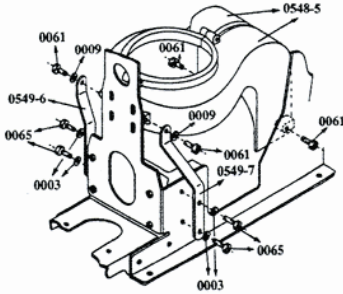

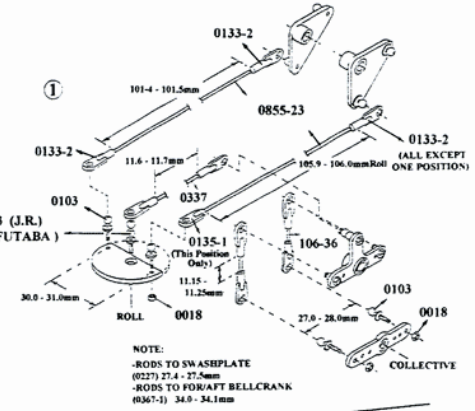

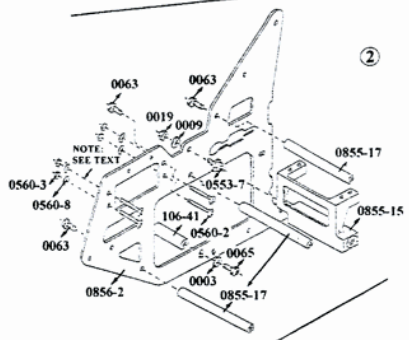

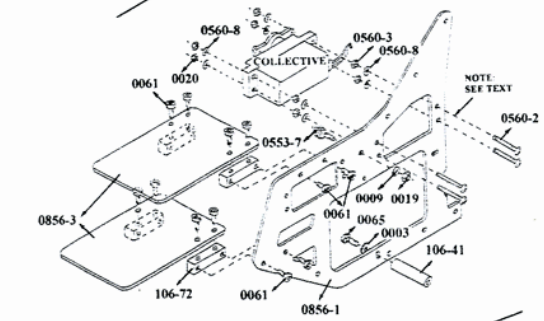

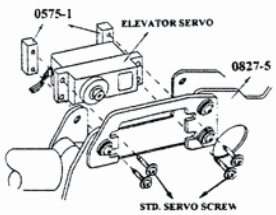

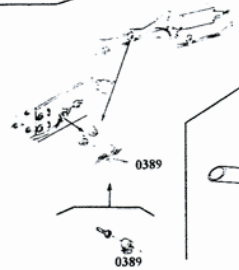

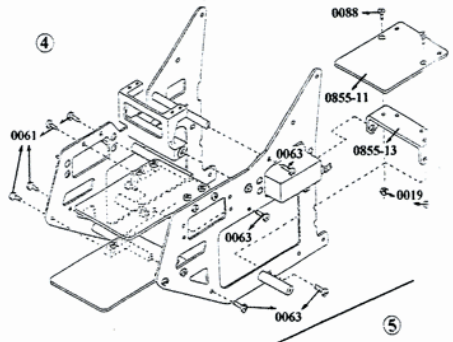

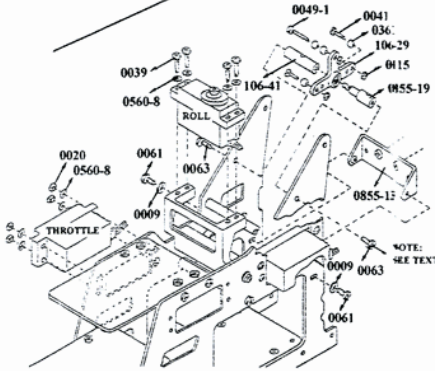

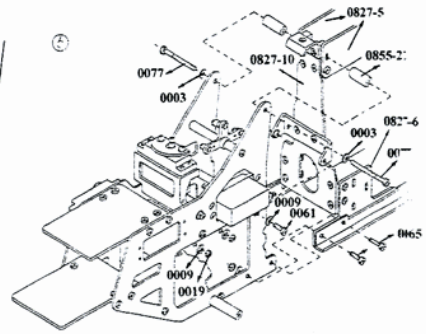

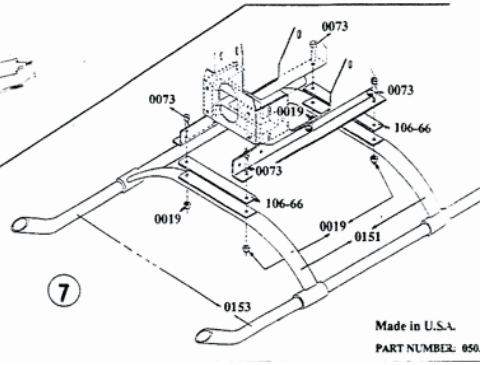

Made in U.S.A.

PART NUMBER: 050

gotomaxx software

SCHOONARD Helicopters'

X-CELL .60 C.T.

miniature aircraft usa

1999 Copyright By Schoonards'
3743 Silver Star Road
Orlando, FL. 32808
Phone 407-292-4267
FAX 407-292-4296

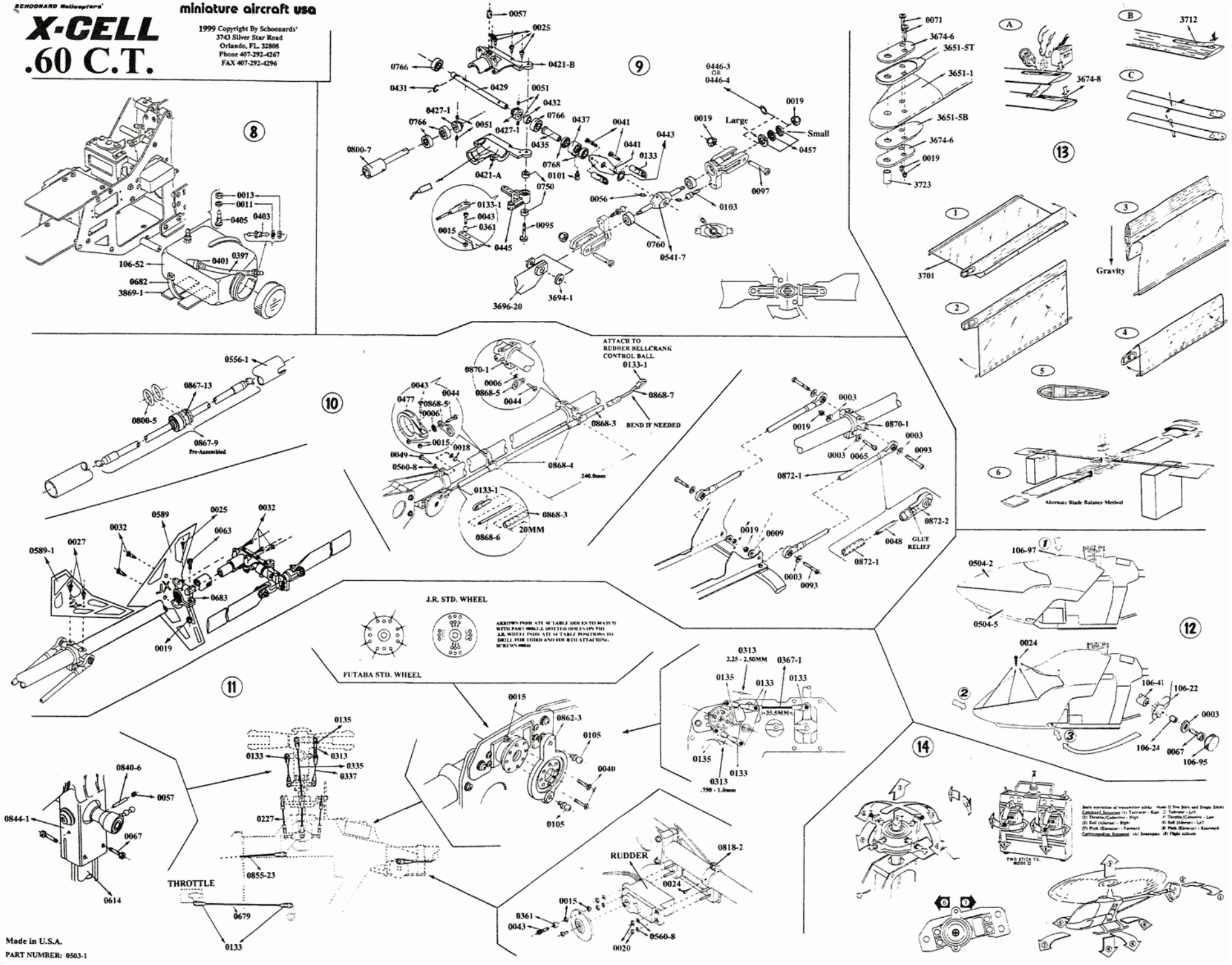

Made in U.S.A.

PART NUMBER: 0503-1

gotomaxx software